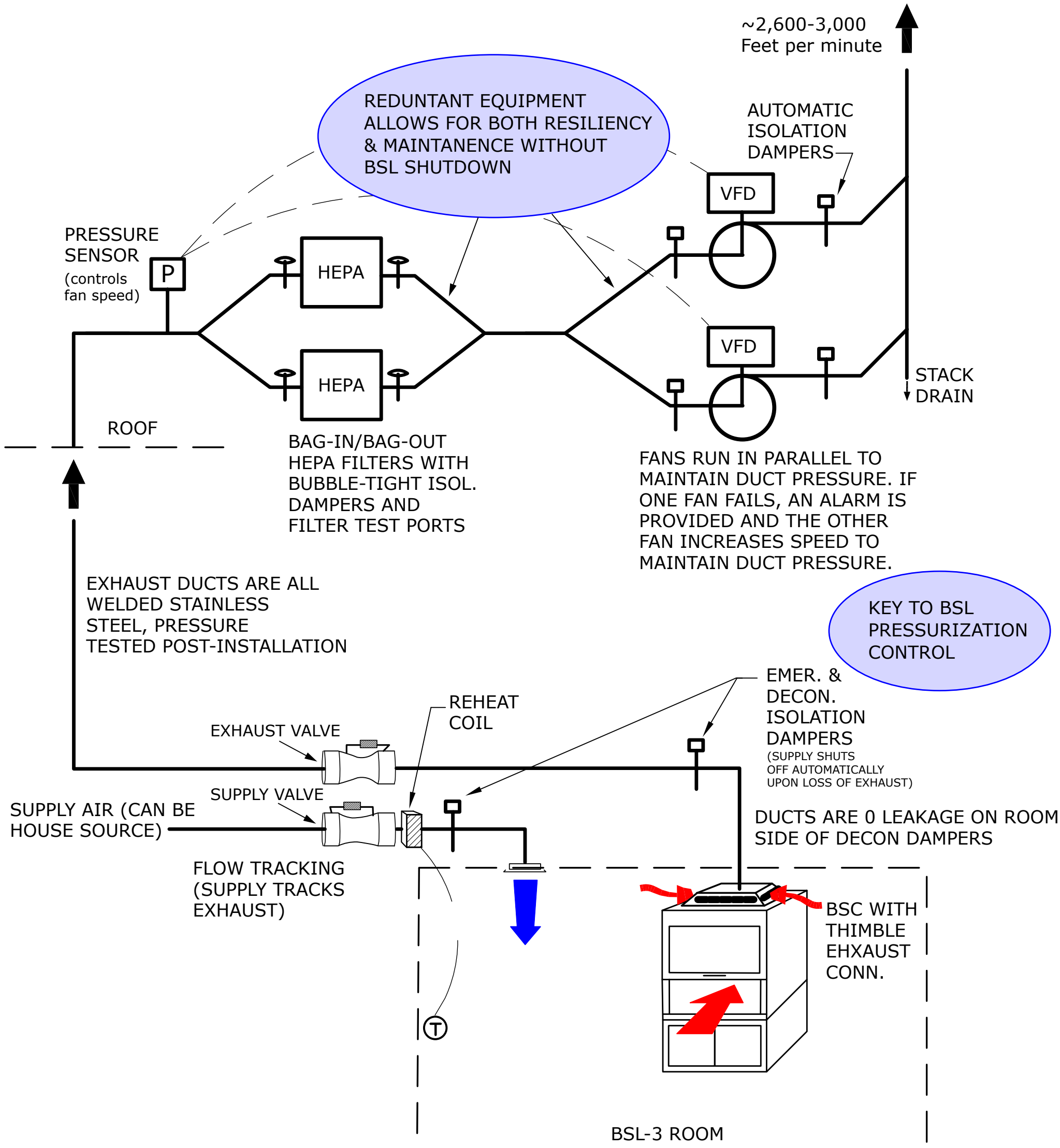
~2,600-3,000
Feet per minute
REDUNTANT EQUIPMENT ALLOWS FOR BOTH RESILIENCY & MAINTANENCE WITHOUT BSL SHUTDOWN
AUTOMATIC ISOLATION DAMPERS
VFD
PRESSURE SENSOR
(controls fan speed)
P
HEPA
HEPA
VFD
STACK DRAIN
ROOF
BAG-IN/BAG-OUT HEPA FILTERS WITH BUBBLE-TIGHT ISOL. DAMPERS AND FILTER TEST PORTS
FANS RUN IN PARALLEL TO MAINTAIN DUCT PRESSURE. IF ONE FAN FAILS, AN ALARM IS PROVIDED AND THE OTHER FAN INCREASES SPEED TO MAINTAIN DUCT PRESSURE.
EXHAUST DUCTS ARE ALL WELDED STAINLESS STEEL, PRESSURE TESTED POST-INSTALLATION
KEY TO BSL PRESSURIZATION CONTROL
EMER. & DECON. ISOLATION DAMPERS
(SUPPLY SHUTS OFF AUTOMATICALLY UPON LOSS OF EXHAUST)
REHEAT COIL
EXHAUST VALVE
SUPPLY VALVE
SUPPLY AIR (CAN BE HOUSE SOURCE)
DUCTS ARE 0 LEAKAGE ON ROOM SIDE OF DECON DAMPERS
FLOW TRACKING (SUPPLY TRACKS EXHAUST)
T
BSC WITH THIMBLE EHXAUST CONN.
BSL-3 ROOM